WIRING DIAGRAM GSX-R750 (88-92)

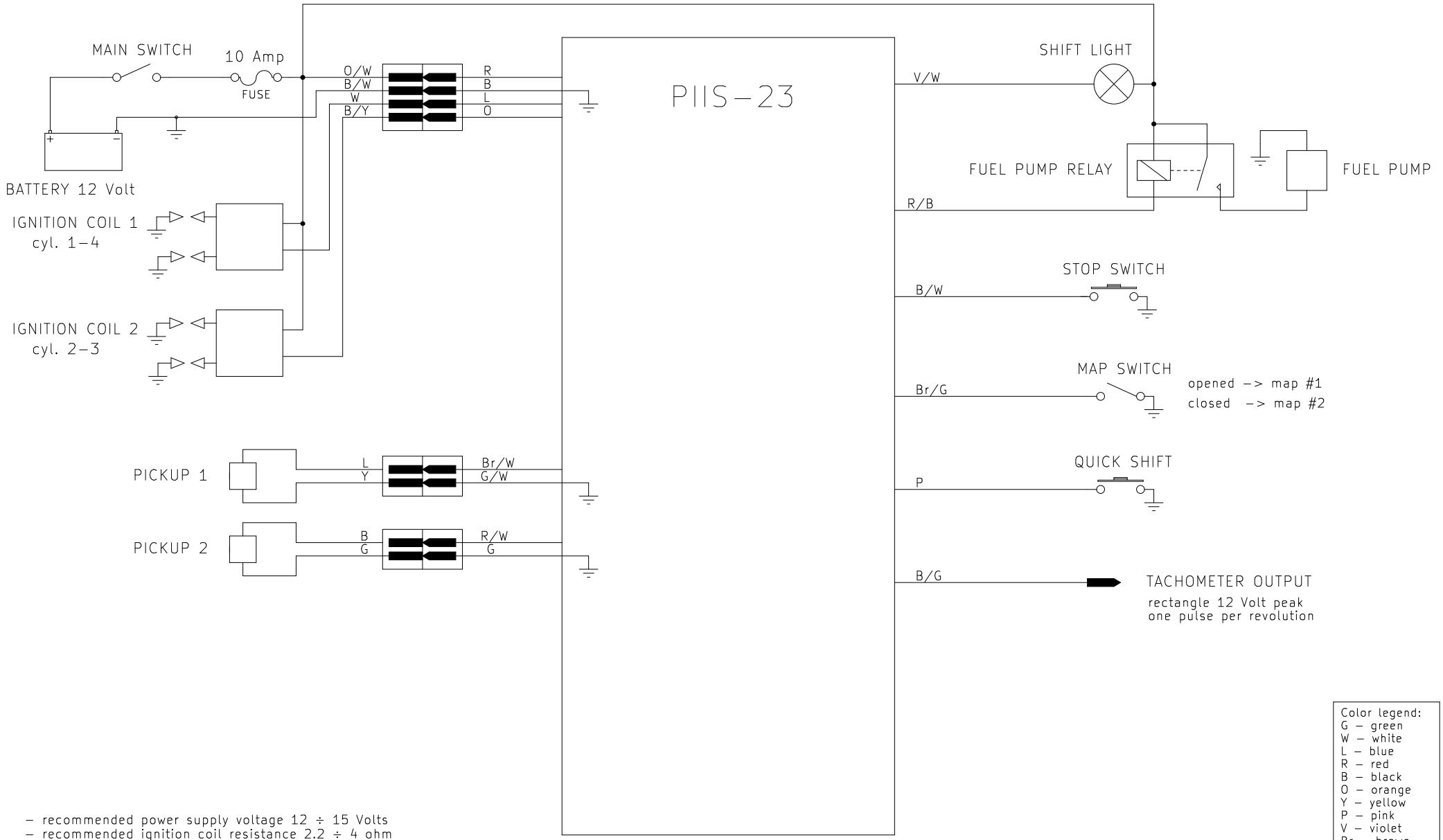

- recommended power supply voltage 12 ÷ 15 Volts
- recommended ignition coil resistance 2.2 ÷ 4 ohm
- recommended ignition coil inductance 5 ÷ 7 mH

Color legend:
G – green
W – white
L – blue
R – red
B – black
O – orange
Y – yellow
P – pink
V – violet
Br – brown
Gr – gray