Wiring diagram for MSD Total Loss pickups

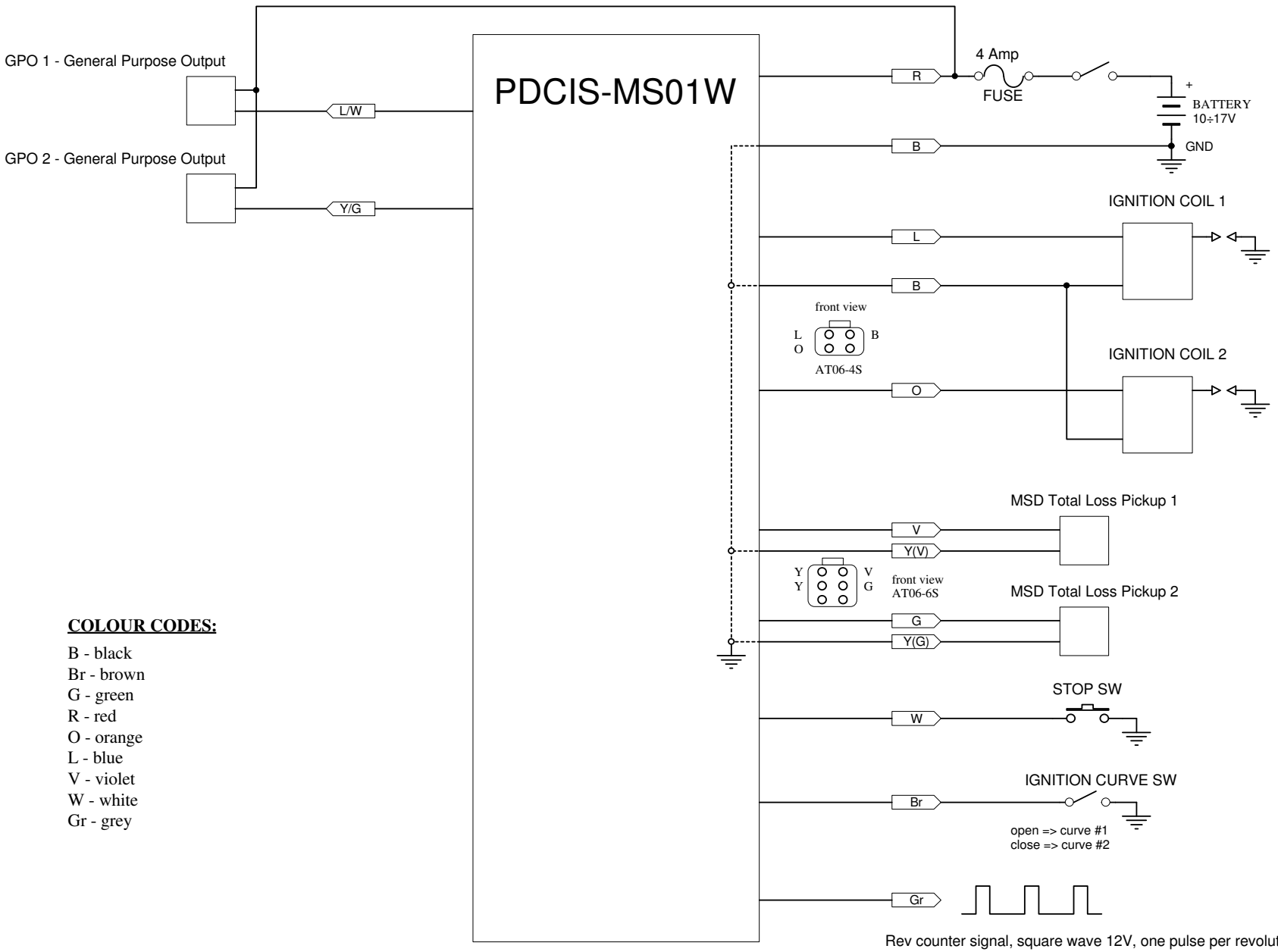

Resistor spark plug must be used!

Recommended ignition coil resistance less then 0,7 ohms.
Recommended ignition coil inductance less then 1mH.

Rev counter signal, square wave 12V, one pulse per revolution.

COLOUR CODES:

B - black
Br - brown
G - green
R - red
O - orange
L - blue
V - violet
W - white
Gr - grey