Wiring diagram

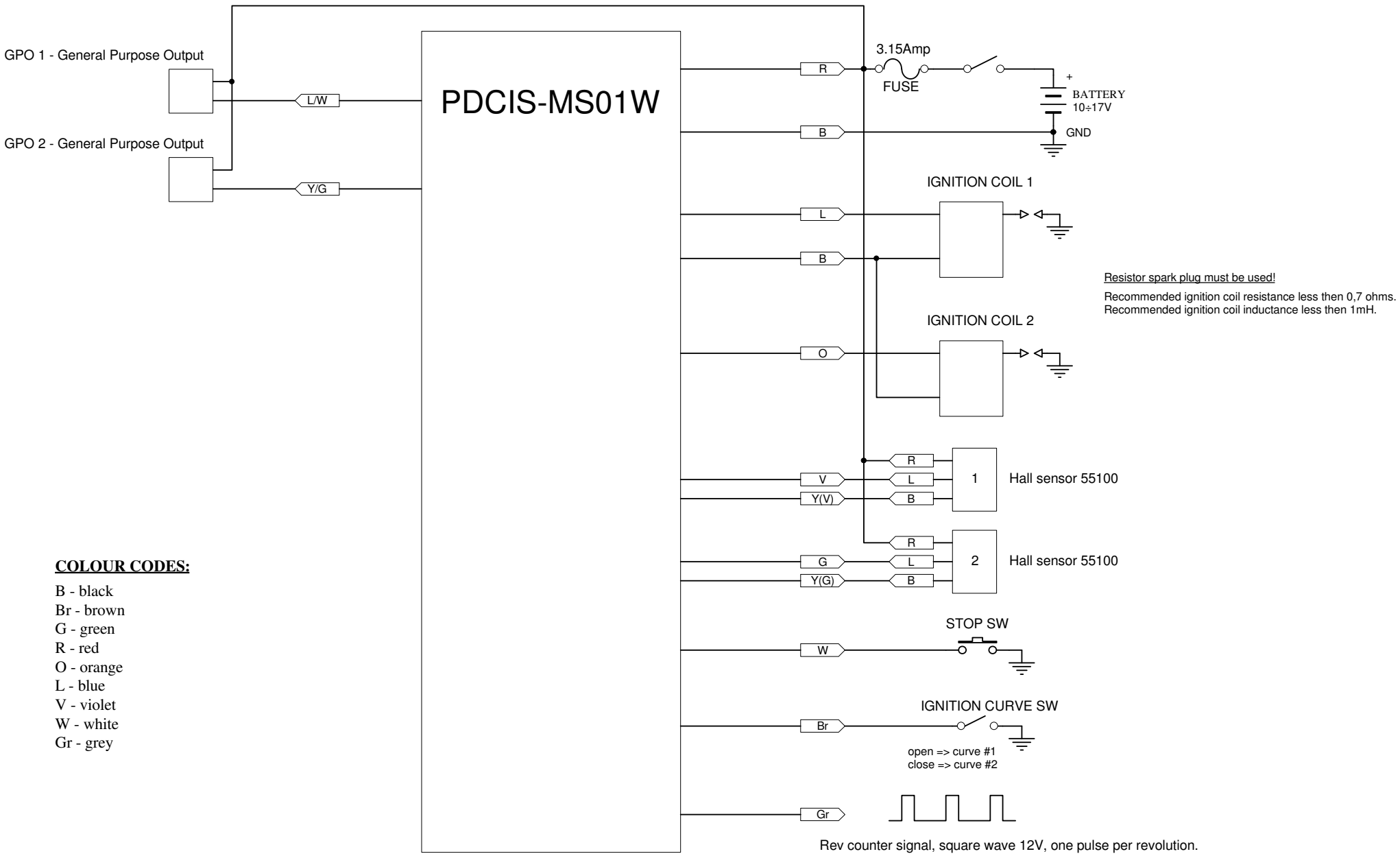

COLOUR CODES:

B - black
Br - brown
G - green
R - red
O - orange
L - blue
V - violet
W - white
Gr - grey