HONDA NSR250 MC21 (rev. 6)

STATIC ANGLE = 54,5 deg

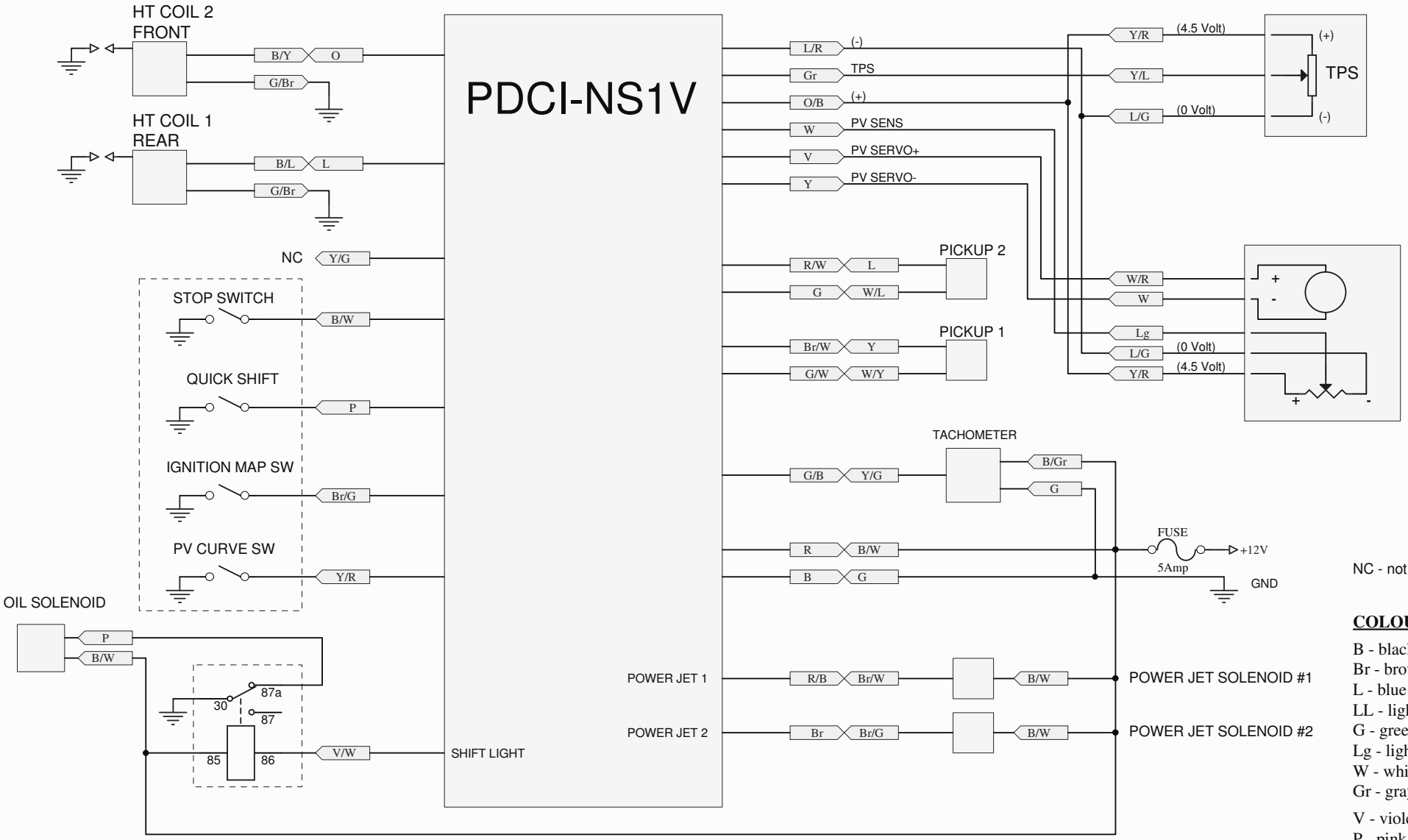

NC - not connected

COLOUR CODES:

B - black
Br - brown
L - blue
LL - light blue
G - green
Lg - light green
W - white
Gr - gray
V - violet
P - pink
O - orange
R - red

TE CONNECTIVITY V23134A1052C643 Automotive Relay (Farnell 1175079)