KAWASAKI KR1S WIRING

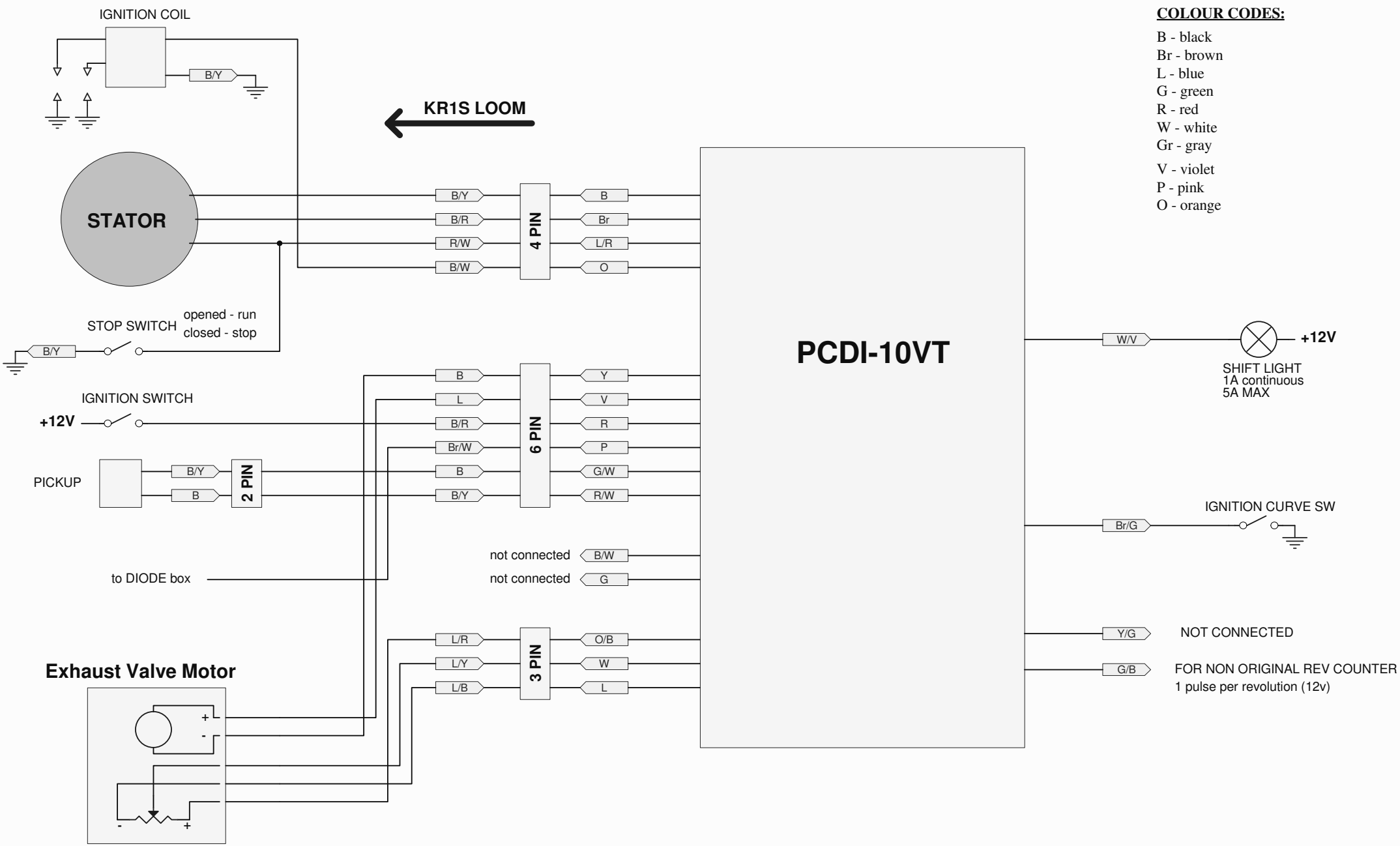

COLOUR CODES:

B - black
Br - brown
L - blue
G - green
R - red
W - white
Gr - gray
V - violet
P - pink
O - orange